3. Manual Transmission Assembly

A: REMOVAL

1) Set the vehicle on a lift.
2) Open the front hood fully, and support with stay.
3) Disconnect the ground cable from battery.
4) Remove the air intake duct and air cleaner case. (Non-turbo model) <Ref. to IN(H4SO)-7, REMOVAL, Air Intake Duct.> <Ref. to IN(H4SO)-5, REMOVAL, Air Cleaner Case.>
5) Remove the air cleaner case stay. (Non-turbo model)

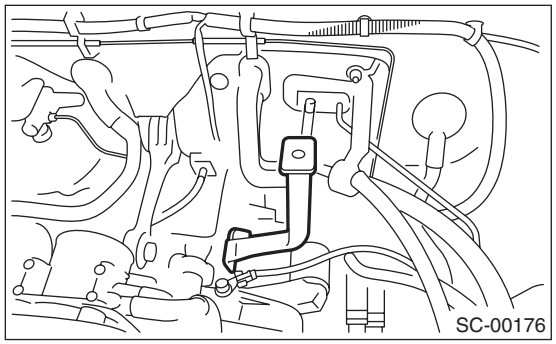

6) Remove the intercooler. (Turbo model) <Ref. to IN(H4DOTC)-13, REMOVAL, Intercooler.>
7) Disconnect the connectors listed below.
   (1) Neutral position switch connector
   (2) Back-up light switch connector
   (3) Vehicle Speed Sensor

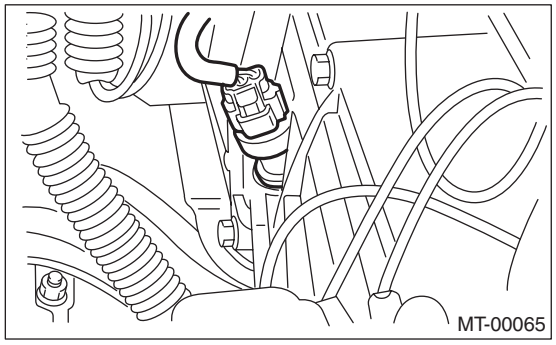

8) Remove the starter. <Ref. to SC(H4SO)-8, REMOVAL, Starter.>
9) Remove the operating cylinder from the transmission, and suspend on a wire.
- Non-turbo model

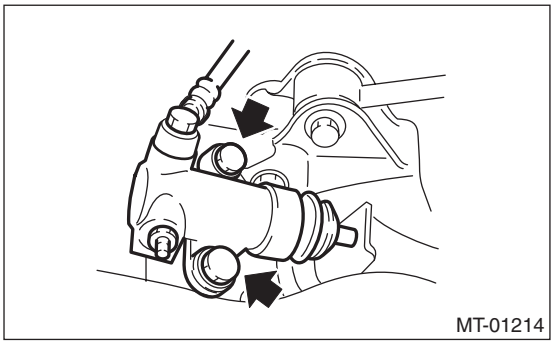

- Turbo model

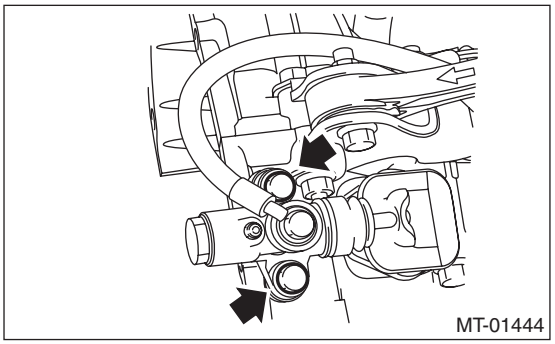

10) Remove the throttle body.
- Non-turbo model

<Ref. to FU(H4SO)-12, REMOVAL, Throttle Body.>
- Turbo model

<Ref. to FU(H4DOTC)-16, REMOVAL, Throttle Body.>
11) Remove the pitching stopper.

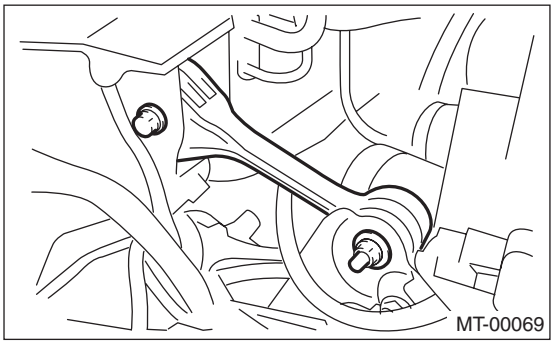

12) Set the ST.
ST 41099AC000 ENGINE SUPPORT BRACKET

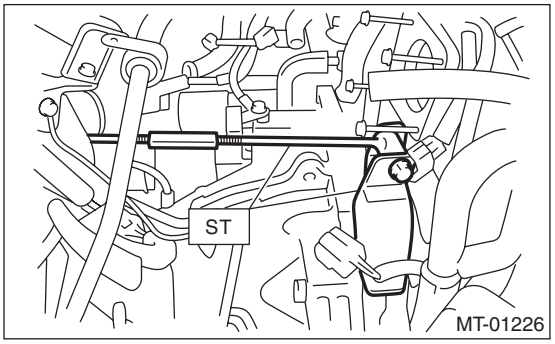

13) Remove the bolts which hold upper side of transmission to engine.

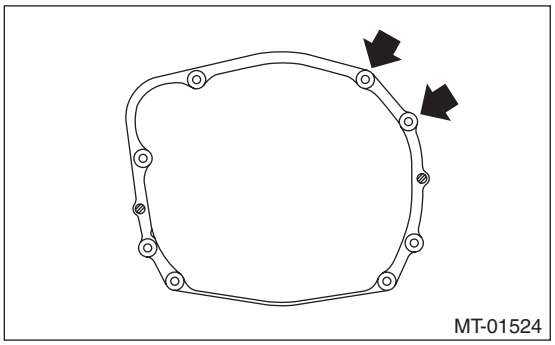

14) Remove the front and center exhaust pipes. (Non-turbo model) <Ref. to EX(H4SO)-4, REMOVAL, Front Exhaust Pipe.> <Ref. to EX(H4SO)-7, REMOVAL, Center Exhaust Pipe.>
15) Remove the center exhaust pipe. (Turbo model) <Ref. to EX(H4DOTC)-10, REMOVAL, Center Exhaust Pipe.>
16) Remove the rear exhaust pipe and muffler.
- Non-turbo model

<Ref. to EX(H4SO)-8, REMOVAL, Rear Exhaust Pipe.> <Ref. to EX(H4SO)-9, REMOVAL, Muffler.>
- Turbo model

<Ref. to EX(H4DOTC)-15, REMOVAL, Rear Exhaust Pipe.> <Ref. to EX(H4DOTC)-17, REMOVAL, Muffler.>

CAUTION:
When removing the exhaust pipes, be careful each exhaust pipe does not drop out.

17) Remove the hanger bracket from the right side of transmission.

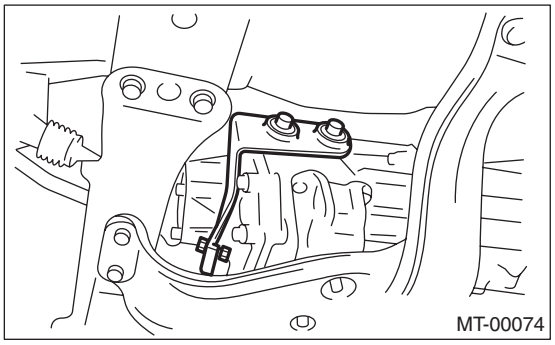

18) Remove the propeller shaft. <Ref. to DS-15, REMOVAL, Propeller Shaft.>
19) Remove the gear shift rod and the stay from the transmission.
(1) Disconnect the stay from the transmission.
(2) Disconnect the gear shift rod from the transmission.

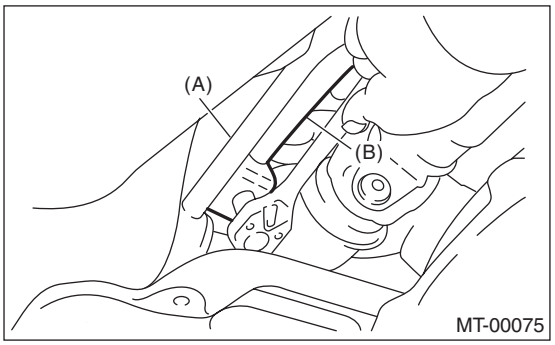

(A) Stay
(B) Gear shift rod

20) Separate the stabilizer link from the transverse link.
- Wagon model

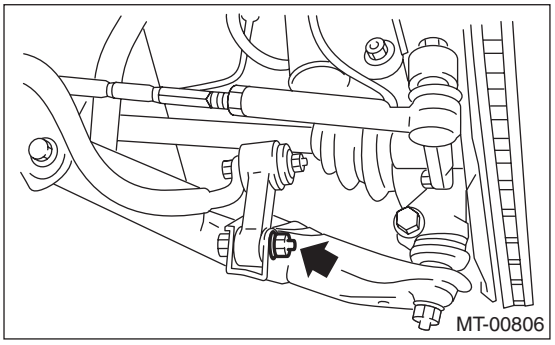

- Sedan model

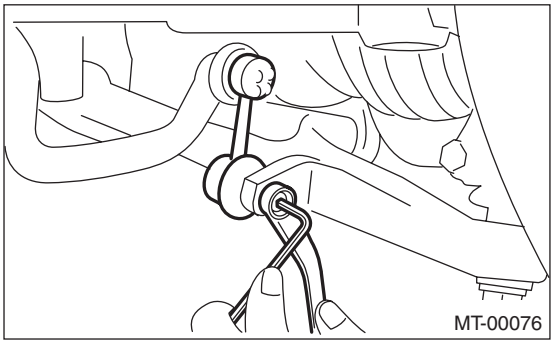

21) Remove the bolt securing the ball joint of the transverse link to the housing, then separate the transverse link and the housing.

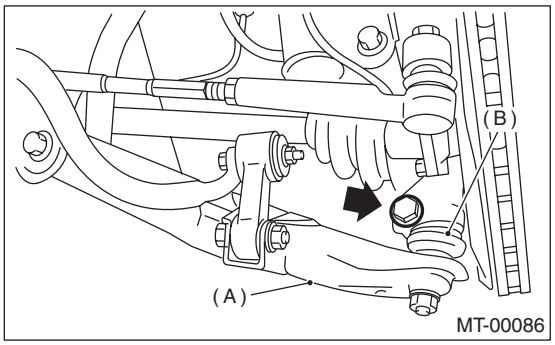

(A) Transverse link
(B) Ball joint

22) Using a crowbar, remove the left and right front drive shaft from the transmission.

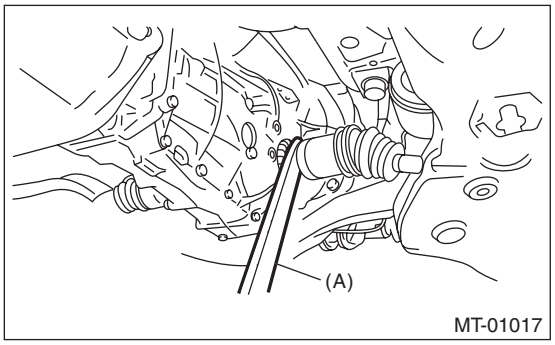

(A) Crowbar

23) Remove the nuts which hold lower side of transmission to engine.

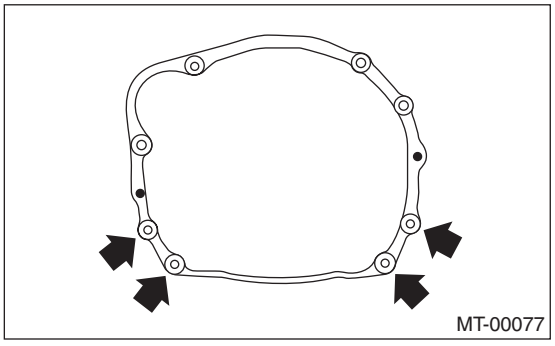

24) Place the transmission jack under the transmission.

CAUTION:
Always support the transmission case with a transmission jack.

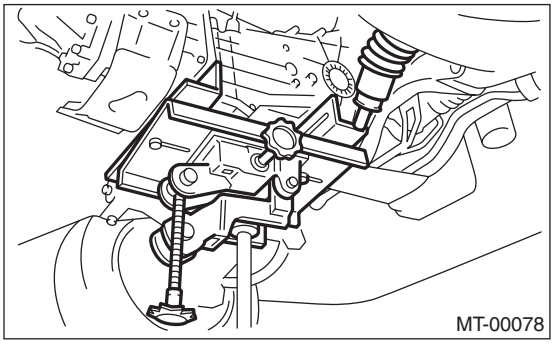

25) Remove the front crossmember and rear crossmember from the vehicle.

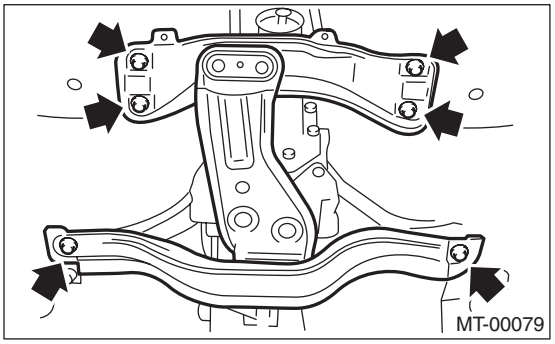

26) Tighten the turnbuckle of the ST while lowering the transmission jack to tilt the engine assembly towards the back.
27) Remove the transmission.

NOTE:
Move the transmission jack towards the rear until the main shaft is withdrawn from the clutch disc.
28) Separate the transmission assembly from the transmission cushion rubber.

B: INSTALLATION

1) Replace the differential side retainer oil seal. <Ref. to 5MT-34, REPLACEMENT, Differential Side Retainer Oil Seal.>

ST 18675AA000 DIFFERENTIAL SIDE OIL SEAL INSTALLER

NOTE:
Be sure to replace the differential side retainer oil seal after the removing the front drive shaft.

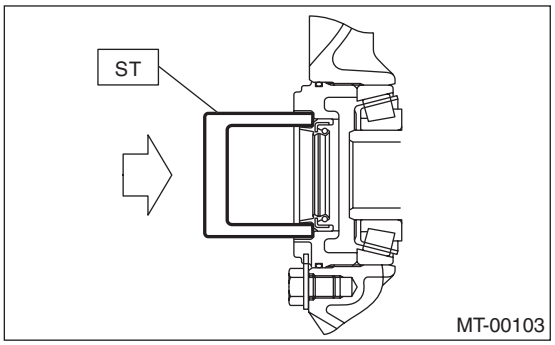

2) Install the transmission cushion rubber to the transmission assembly.

Tightening torque:
35 N·m (3.6 kgf-m, 26 ft-lb)

3) Install the transmission onto the engine.
   (1) Lift up the transmission gradually using a transmission jack.
   (2) Engage at the spline section.

NOTE:
Be careful not to hit the main shaft against the clutch cover.

4) Loosen the turnbuckle of the ST while raising the transmission jack to return the engine to its original position.

5) Install the front crossmember and rear crossmember.

Tightening torque:
T1: 70 N·m (7.1 kgf-m, 51.6 ft-lb)
T2: 140 N·m (14.3 kgf-m, 103 ft-lb)

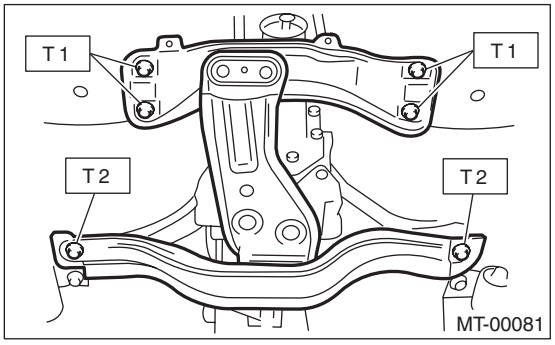

6) Take out the transmission jack.

7) Tighten the nuts which hold the lower side of transmission to the engine.

Tightening torque:
50 N·m (5.1 kgf-m, 37 ft-lb)

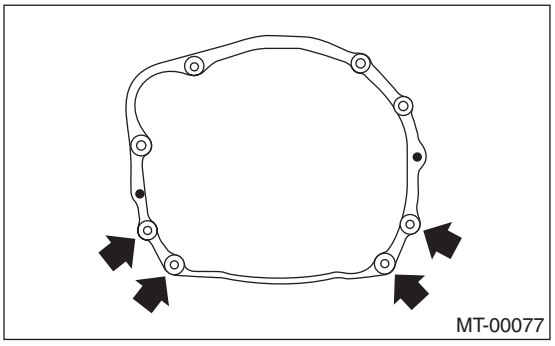

8) Connect the transmission to the engine.
   (1) Install the starter.
   <Ref. to SC(H4SO)-8, INSTALLATION, Starter.>
   (2) Tighten the bolts which hold the upper side of the transmission to the engine.

Tightening torque:
50 N·m (5.1 kgf-m, 37 ft-lb)

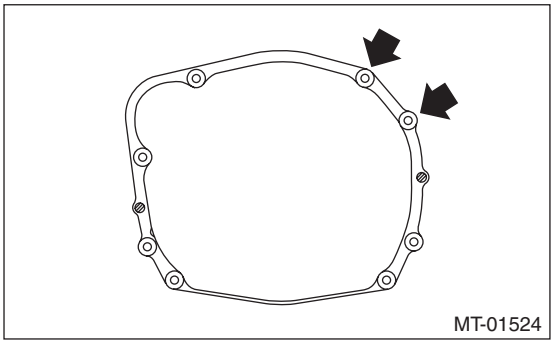

9) Remove the ST.

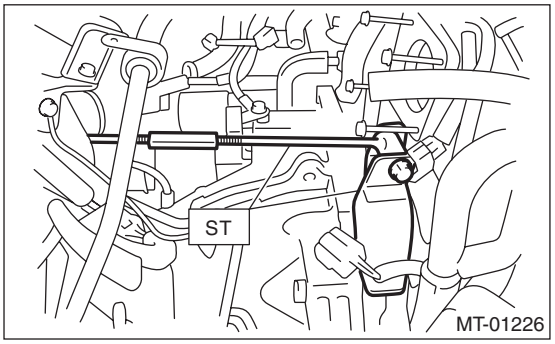

10) Install the pitching stopper.

Tightening torque:
T1: 50 N·m (5.1 kgf-m, 37 ft-lb)
T2: 58 N·m (5.9 kgf-m, 43 ft-lb)

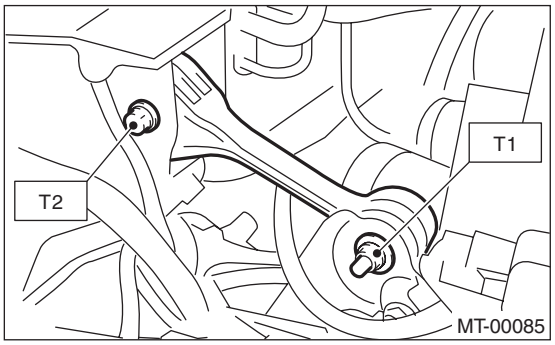

11) Install the throttle body.
- Non-turbo model

<Ref. to FU(H4SO)-12, INSTALLATION, Throttle Body.>
- Turbo model

<Ref. to FU(H4DOTC)-16, INSTALLATION, Throttle Body.>

12) Lift up the vehicle.
13) Install the front drive shaft into the transmission.

ST 28399SA010 OIL SEAL PROTECTOR

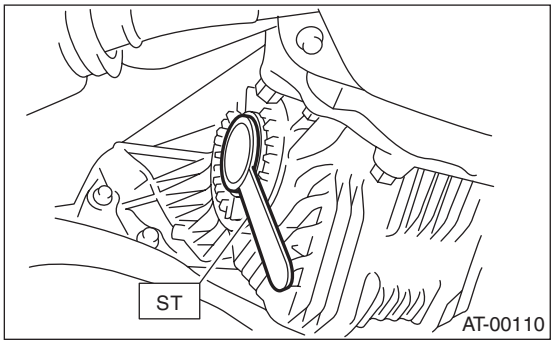

14) Insert the ball joints of the transverse link into the lower part of housing, then tighten the installing bolts.

Tightening torque:
50 N·m (5.1 kgf-m, 36.9 ft-lb)

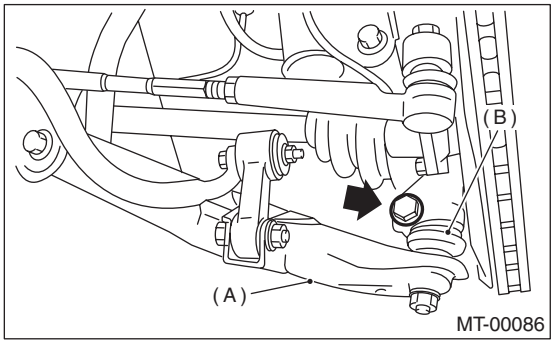

(A) Transverse link
(B) Ball joint

15) Attach the stabilizer link to the transverse link.
- Wagon model

Tightening torque:
30 N·m (3.1 kgf-m, 22 ft-lb)

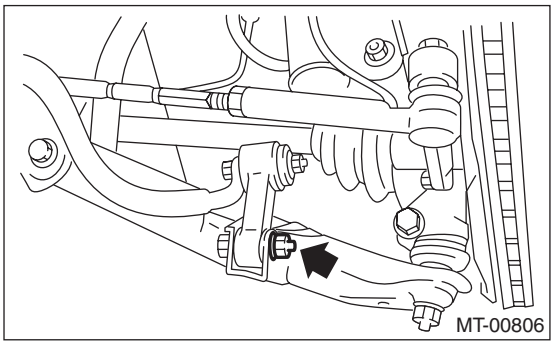

- Sedan model

Tightening torque:
45 N·m (4.6 kgf-m, 33 ft-lb)

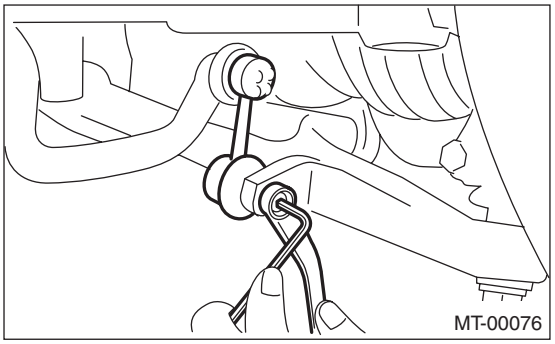

16) Attach the gear shift rod and stay.
(1) Attach the gear shift rod to the transmission.

Tightening torque:
12 N·m (1.2 kgf-m, 8.9 ft-lb)

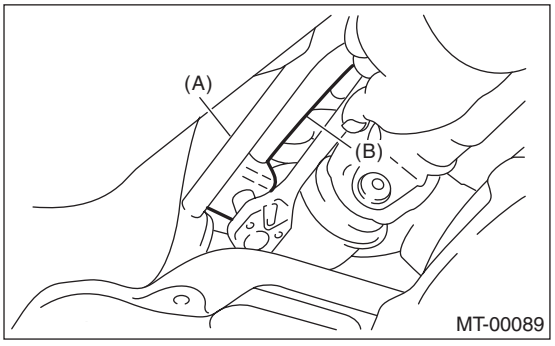

(A) Stay
(B) Gear shift rod

(2) Attach the stay to the transmission.

Tightening torque:
18 N·m (1.8 kgf-m, 13.0 ft-lb)

17) Install the propeller shaft. <Ref. to DS-16, INSTALLATION, Propeller Shaft.>

18) Install the hanger bracket on the right side of the transmission.

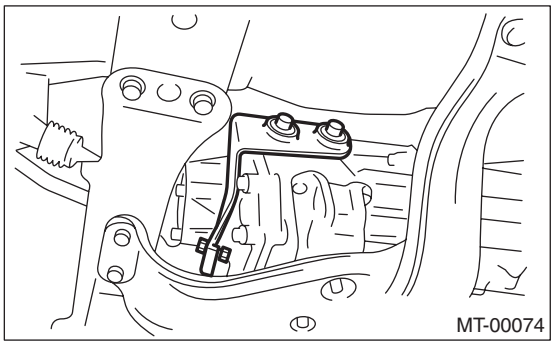

19) Install the rear exhaust pipe and muffler.
- Non-turbo model

<Ref. to EX(H4SO)-8, INSTALLATION, Rear Exhaust Pipe.> <Ref. to EX(H4SO)-9, INSTALLATION, Muffler.>
- Turbo model

<Ref. to EX(H4DOTC)-15, INSTALLATION, Rear Exhaust Pipe.> <Ref. to EX(H4DOTC)-17, INSTALLATION, Muffler.>

20) Install the front exhaust pipe and the center exhaust pipe. (Non-turbo model)
<Ref. to EX(H4SO)-5, INSTALLATION, Front Exhaust Pipe.> <Ref. to EX(H4SO)-7, INSTALLATION, Center Exhaust Pipe.>

21) Install the center exhaust pipe. (Turbo model)
<Ref. to EX(H4DOTC)-11, INSTALLATION, Center Exhaust Pipe.>

22) Install the under cover.

23) Install the operating cylinder.

Tightening torque:
37 N·m (3.8 kgf-m, 27.5 ft-lb)
- Non-turbo model

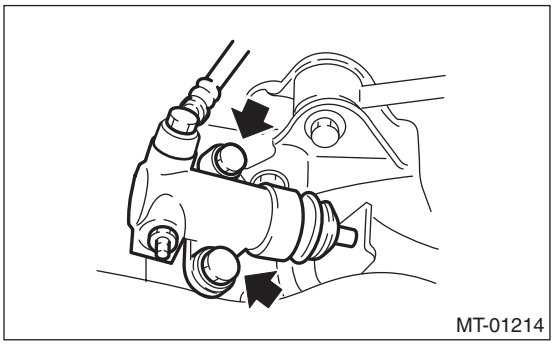

- Turbo model

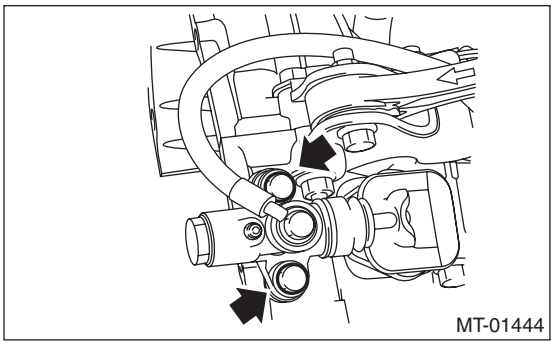

24) Connect the following connectors.
(1) Transmission ground cable

Tightening torque:
13 N·m (1.3 kgf-m, 9.4 ft-lb)
(2) Vehicle speed sensor connector
(3) Neutral position switch connector
(4) Back-up light switch connector

25) Install the air cleaner case stay.

Tightening torque:
16 N·m (1.6 kgf-m, 11.6 ft-lb)

26) Install the air intake duct and air cleaner case. (Non-turbo model)
<Ref. to IN(H4SO)-5, INSTALLATION, Air Cleaner Case.>, <Ref. to IN(H4SO)-7, INSTALLATION, Air Intake Duct.>

27) Install the intercooler. (Turbo model)
<Ref. to IN(H4DOTC)-14, INSTALLATION, Intercooler.>

28) Connect the ground cable to battery.

29) Take off the vehicle from lift arms.